Vacuum Cups

Sinclair Flanged Series

Outline

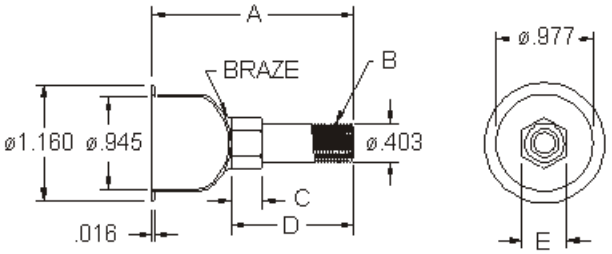

Image

Notes:
- Flangeless eyelets, "H" & "J" are from end of eyelet.
- Parts subject to revision without notice.
- Call Sinclair to verify design, inventory counts and pricing.
- $500 minimum order.

Details

Part Number	File No.	A	B	C	D	E	Notes
VCCRS1160-1937-592	VA-0047	1.937	N/A	N/A	1 3/16"	N/A	SPECIAL STEM, .977 DIA.
VCCRS1160-2005-437	VA-0022	2.000	1/8-27 NPT	.310	1.250	7/16"	
VCMO1160-2015-437	VA-0023	2.015	1/8-27 NPT	.310	1 1/4"	7/16"	
VCMO1160-2015-500	VA-0029	2.015	N/A	.325	1.265	.248 DIA.	
VCCRS1160-2505-687	VA-0044	2.505	1/8-27 NPT	.250	1.790	11/16"	

Sinclair Manufacturing Company • 12 South Worcester Street • Post Office Box 398 • Chartley, MA 02712
(508) 222-7440 Telephone • (508) 226-0517 Fax • www.sinclairmfg.com

Vacuum Cups

Sinclair Flangeless Series

Outline

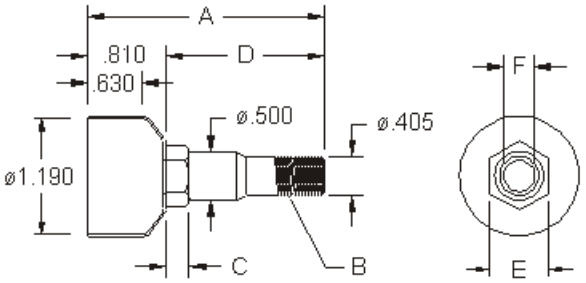

Image

Notes:
- Flangeless eyelets, "H" & "J" are from end of eyelet.
- Parts subject to revision without notice.
- Call Sinclair to verify design, inventory counts and pricing.
- $500 minimum order.

Details

Part Number	File No.	A	B	C	D	E	F	Notes
VCSS1235-1830-687	VA-0039	1.830	N/A	N/A	1.020	11/16"	.120	CAJON NUT, GLAND
VCSS1235-2120-750	VA-0034	2.120	N/A	N/A	1.310	3/4"	.180	CAJON NUT, GLAND
VCMO1235-2440-562	VA-0009	2.440	1/8-27 NPT	.250	1.620	9/16"	.268	
VCCRS1230-2440-562	VA-0003	2.440	1/8-27 NPT	.250	1.630	9/16"	.266	
VCSS1230-2440-562	VA-0004	2.440	1/8-27 NPT	.250	1.630	9/16"	.266	

Sinclair Manufacturing Company • 12 South Worcester Street • Post Office Box 398 • Chartley, MA 02712
(508) 222-7440 Telephone • (508) 226-0517 Fax • www.sinclairmfg.com

Vacuum Cups

Sinclair Skirt-Style Series

Outline

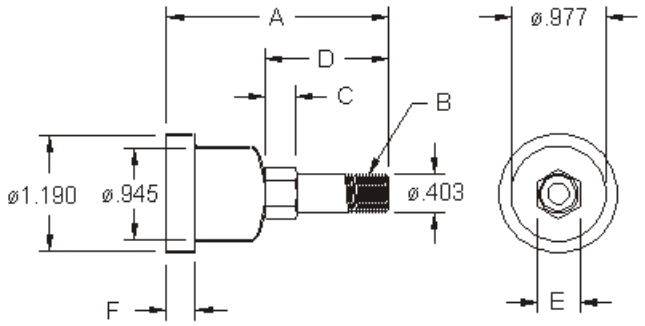

Image

Notes:
- Flangeless eyelets, "H" & "J" are from end of eyelet.
- Parts subject to revision without notice.
- Call Sinclair to verify design, inventory counts and pricing.
- $500 minimum order.

Details

Part Number	File No.	A	B	C	D	E	F	Notes
VCSS1160-1810-500	VA-0048	1.810	N/A	N/A	1.060	N/A	.305	MOVEABLE SKIRT, CUSTOM FLANGE
VCSS1222-1942-750	VA-0021	1.942	N/A	N/A	.910	3/4"	.298	CAJON NUT
VCSS1222-1953-750	VA-0040	1.953	N/A	N/A	.906	3/4"	.298	CAJON NUT & MACH'D GLAND
VCSS1222-2012-405	VA-0042	2.012	N/A	N/A	.980	.405 DIA.	.298	SPECIAL STEM
VCMO1222-2187-437	VA-0019	2.187	1/8-27 NPT	.312	1.250	7/16"	.200	3-PIECE
VCSS1160-2215-500-1	VA-0046	2.215	N/A	N/A	1.475	N/A	.305	MOVEABLE SKIRT, CUSTOM FLANGE
VCSS1160-2215-500	VA-0035	2.215	N/A	N/A	1.575	N/A	.305	MOVEABLE SKIRT; FLANGED STEM
VCSS1222-2219-562	VA-0049	2.219	1/8-27 NPT	.312	1.312	9/16"	.175	
VCSS1222-2238-750	VA-0041	2.238	N/A	N/A	1.187	3/4"	.298	CAJON NUT & GLAND
VCMO1222-2250-562-1	VA-0018	2.250	1/8-27 NPT	.312	1.312	9/16"	.200	3-PIECE
VCMO1222-2250-562	VA-0036	2.250	1/8-27 NPT	.312	1.312	9/16"	.200	
VCSS1222-2250-562	VA-0045	2.250	1/8-27 NPT	.312	1.312	9/16"	.200	
VCCRS1222-2281-437	VA-0016	2.281	1/8-27 NPT	.312	1.250	7/16"	.298	
VCSS1222-2298-437	VA-0038	2.298	1/8-27 NPT	.312	1.250	7/16"	.298	
VCCRS1222-2344-562	VA-0017	2.344	1/8-27 NPT	.312	1.312	9/16"	.298	
VCSS1222-2344-562	VA-0037	2.344	1/8-27 NPT	.312	1.312	9/16"	.298	
VCSS1222-2490-500	VA-0052	2.490	N/A	N/A	1.475	N/A	.298	FLANGE STEM

Sinclair Manufacturing Company • 12 South Worcester Street • Post Office Box 398 • Chartley, MA 02712
(508) 222-7440 Telephone • (508) 226-0517 Fax • www.sinclairmfg.com

Vacuum Cups

Sinclair Sharp Wall Cup Series

Outline

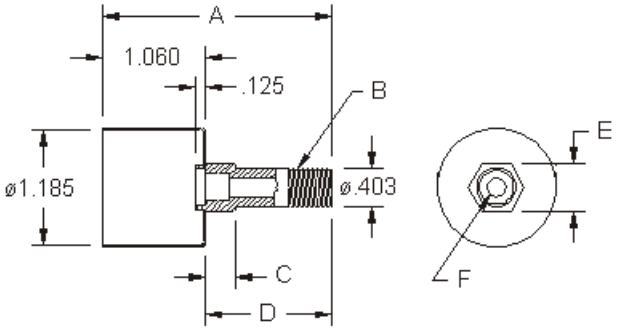

Image

Notes:
- Flangeless eyelets, "H" & "J" are from end of eyelet.
- Parts subject to revision without notice.
- Call Sinclair to verify design, inventory counts and pricing.
- $500 minimum order.

Details

Part Number	File No.	A	B	C	D	E	F	Notes
VCSS1220-2375-562	VA-0005	2.375	1/8-27 NPT	.312	1.312	9/16"	.190	
VCCRS1220-2375-562-1	VA-0006	2.375	1/8-27 NPT	.312	1.312	9/16"	.190	SHORT INTERNAL STEM BORE
VCCRS1220-2375-562	VA-0031	2.375	1/8-27 NPT	.312	1.312	9/16"	.190	LONG INTERNAL STEM BORE
VCCRS1220-3437-750	VA-0007	3.437	N/A	N/A	2.375	N/A	.281	

Sinclair Manufacturing Company • 12 South Worcester Street • Post Office Box 398 • Chartley, MA 02712
(508) 222-7440 Telephone • (508) 226-0517 Fax • www.sinclairmfg.com