Vacuum Cups

Sinclair Sharp Wall Cup Series

Outline

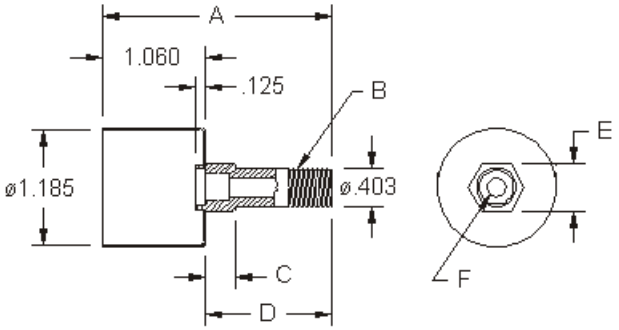

Image

Notes:
- Flangeless eyelets, "H" & "J" are from end of eyelet.
- Parts subject to revision without notice.
- Call Sinclair to verify design, inventory counts and pricing.
- $500 minimum order.

Details

Part Number	File No.	A	B	C	D	E	F	Notes
VCSS1220-2375-562	VA-0005	2.375	1/8-27 NPT	.312	1.312	9/16"	.190	
VCCRS1220-2375-562-1	VA-0006	2.375	1/8-27 NPT	.312	1.312	9/16"	.190	SHORT INTERNAL STEM BORE
VCCRS1220-2375-562	VA-0031	2.375	1/8-27 NPT	.312	1.312	9/16"	.190	LONG INTERNAL STEM BORE
VCCRS1220-3437-750	VA-0007	3.437	N/A	N/A	2.375	N/A	.281	

Sinclair Manufacturing Company • 12 South Worcester Street • Post Office Box 398 • Chartley, MA 02712
(508) 222-7440 Telephone • (508) 226-0517 Fax • www.sinclairmfg.com